An EZ-Lindenblad Antenna for 2 Meters

This easy to build antenna works well for satellite or terrestrial communication, horizontal or vertically polarized.

Anthony Monteiro, AA2TX

Lindenblad is the name of a type of antenna that is circularly polarized yet has an omnidirectional radiation pattern. With most of its gain at low elevation angles, it is ideal for accessing low earth orbit (LEO) Amateur Radio satellites. Because it is omnidirectional, it does not need to be pointed at a satellite so it eliminates the complexity of an azimuth/elevation rotator system. This makes the Lindenblad especially useful for portable or temporary satellite operations. It is also a good general purpose antenna for a home station because its circular polarization is compatible with the linearly polarized antennas used for FM/repeater and SSB or CW operation.

This type of antenna was devised by Nils Lindenblad of the Radio Corporation of America (RCA) around 1940.[1] At that time, he was working on antennas for the then nascent television broadcasting (TV) industry. His idea was to employ four dipoles spaced equally around a λ/3 diameter circle with each dipole canted 30° from the horizontal. The dipoles are all fed in phase and are fed equal power. The spacing and tilt angles of the dipoles create the desired antenna pattern when the signals are all combined. Unfortunately, the start of World War II halted Lindenblad's TV antenna work.

After the war, George Brown and Oakley Woodward, also of RCA, were tasked with finding ways to reduce fading on ground-to-air radio links at airports.[2] These links used linearly polarized antennas. The maneuverings of the airplanes often caused large signal dropouts if the antennas became cross-polarized. Brown and Woodward realized that using a circularly polarized antenna at the airport could reduce or eliminate this fading so they decided to try Lindenblad's TV antenna concept.

Brown and Woodward designed their antenna using metal tubing for the dipole elements. Each dipole element is attached to a section of shorted open-wire-line, also made from tubing, which serves as a balun transformer. A coaxial cable runs through one side of each open-wire-line to feed each dipole. The four coaxial feed cables meet at a center hub section where they are connected in parallel to provide a four-way, in-phase power-splitting function. This cable junction is connected to another section of coaxial cable that serves as an impedance matching section to get a good match to 50 Ω. While the Brown and Woodward design is clever and worked well, it would be quite difficult for the average ham (including this author!) to duplicate.

The major cause of the difficulty in designing and constructing Lindenblad antennas is the need for the four-way, in-phase, power splitting function. Since we generally want to use 50 Ω coaxial cable to feed the antenna, we have to somehow provide an impedance match from the 50 Ω unbalanced coax to the four 75 Ω balanced dipole loads.

Previous designs have used combinations of folded dipoles, open-wire lines, twin-lead feeds, balun transformers and special impedance matching cables in order to try to get a good match to 50 Ω. These in turn increase the complexity and difficulty of the construction.

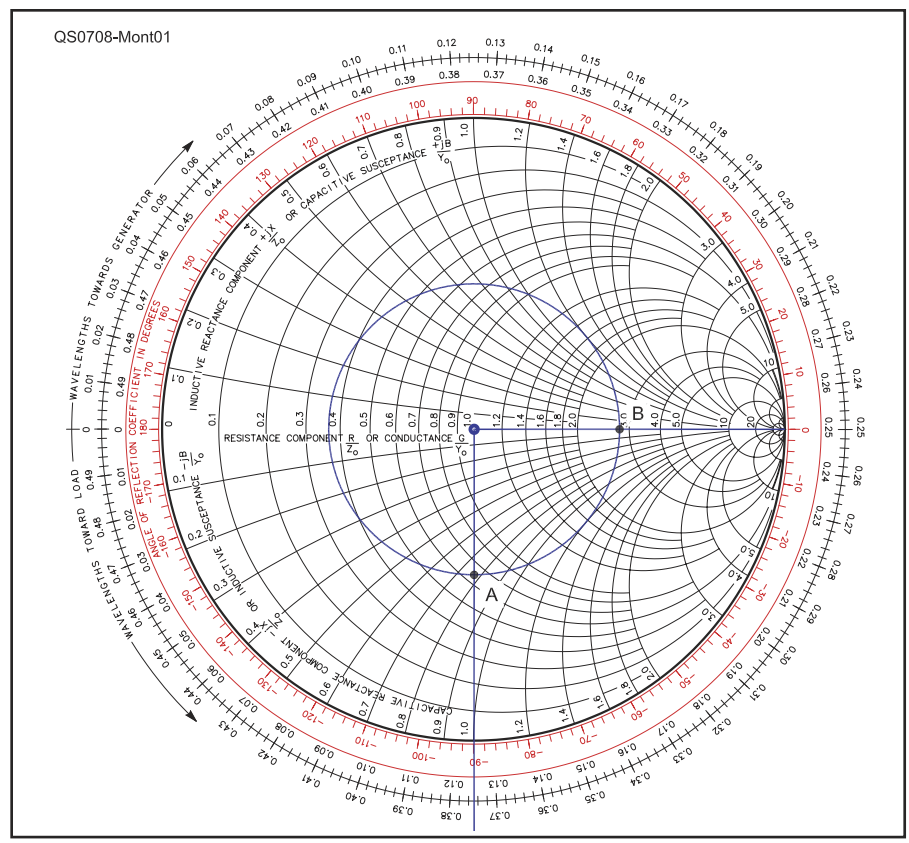

Figure 1 — Smith Chart showing transformation along a 75 Ω transmission line to yield 200 Ω.

[1]Notes appear on page 40.

From August 2007 QST © ARRL

Table 1
Required Materials

Quantity one, unless noted.

Aluminum tubing, 17 gauge, 6 foot length of ¾" outer diameter, quantity 3. Available from Texas Towers, **www.texastowers.com**.
Aluminum angle stock, 8" length of 2" × 2" × 1/16".
Aluminum angle stock, 2" length of 2" × 2" × 1/16" for mounting connector.
Screws, #8 × ½" aluminum sheet metal, quantity 12.
Screws, #8 × ½" aluminum sheet metal or 3/16" aluminum rivets, quantity 12.
PVC insert T-connector, ½" × ½" × ½" grey for irrigation polyethylene tubing. LASCO Fittings, Inc. Part# 1401-005 or equivalent. Available from most plumbing supply and major hardware stores, quantity 4.
Plastic end caps (optional), black ¾", quantity 8.
N-connector for RG-8 cable, single-hole, chassis-mount, female.
Cable ferrite, Fair-Rite part # 2643540002, quantity 4 (Mouser Electronics #623-2643540002).
RG-59 polyethylene foam coax with stranded center conductor, 10' length.
Copper braid, 4" long piece.
Ring terminal, uninsulated 22-18 gauge for 8-10 stud, quantity 4.
Ring terminal, uninsulated 12-10 gauge for 8-10 stud, quantity 4.
Heat shrink tubing for ¼" cable, wire ties, electrical tape, as needed.
Ox-Gard OX-100 grease for aluminum electrical connections.

The EZ-Lindenblad

An antidote to these difficulties is the EZ-Lindenblad. The key concept of the EZ approach is to eliminate anything that is electrically or mechanically difficult, leaving only things that are *easy*. This leads to the idea of just feeding the four dipoles with coax cable and soldering the cables to a connector with no impedance matching devices at all. This would certainly be *easy* but we also want the antenna to work! Without the extra impedance matching devices, how is it possible to get a good match to 50 Ω?

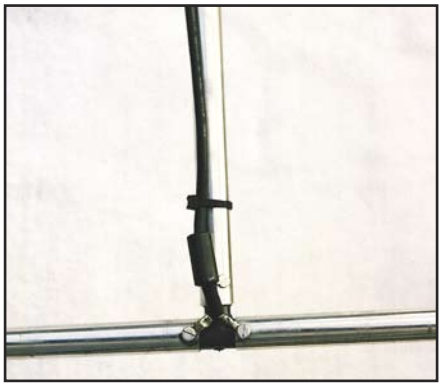

Figure 2 — Close-up of dipole electrical connections.

If we could get each of the four coax feed cables to look like 200 Ω at the connector, then the four in parallel would provide a perfect match to 50 Ω. We could do this if we used quarter-wavelength sections of 122 Ω coax to convert each 75 Ω dipole load to 200 Ω. Unfortunately, there is no such coax that is readily available.

But we can accomplish the same thing with ordinary 75 Ω, RG-59 TV type coax if we run the cable with an intentional impedance mismatch. By forcing the standing wave ratio (SWR) on the cable to be equal to 200/75, or about 2.7:1, we can make each cable look exactly like 200 Ω at the connector as long as we make them the right length. It is easy to make the SWR equal 2.7:1 by just making the dipoles a little too short for resonance. An *EZNEC* antenna model can be used to determine the exact dipole dimensions.[3]

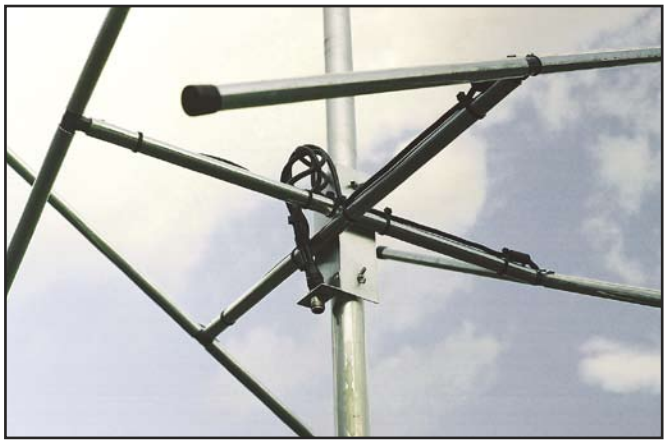

Figure 3 — View of cross booms mounted to mast.

The conversion from the balanced dipole load to the unbalanced coax cable can be painlessly accomplished by threading each cable through an inexpensive and readily available ferrite sleeve making essentially a choke balun. The only remaining issue is the required length of the feed cables, and this can be easily determined using a *Smith Chart*.

Smith Chart

The Smith Chart was invented by Phillip Smith of The Bell Telephone Laboratories in 1939.[4] As a high school student, Phillip had been a ham radio operator and used the call sign 1ANB. After graduating from Tufts College, he went to work for Bell Labs in the radio research department. As part of his job, he needed to make many impedance calculations that in those days required doing many complex computations by hand. Phillip realized he could create a chart that would allow the solution to be plotted on a graph making his job a lot easier. Phillip Smith's chart was soon adopted by other radio engineers and quickly became a standard engineering tool that is still in use today. Technical information and free downloadable Smith Charts are available via links on the ARRL Web site.[5] Please see the Smith Chart in Figure 1.

With a Smith Chart, we can easily determine the required length of 75 Ω coax to provide a 200 Ω load. The Smith Chart shown is normalized to 1 Ω in the center so we must multiply all impedance values by our coax impedance of 75 Ω. An *EZNEC* antenna model was used to simulate cutting the dipole lengths until the SWR on the line reached 2.7:1. The model showed that the dipole load impedance would then be 49 –*j*55 Ω and this is plotted at point A on the chart. The desired 200 Ω impedance at the connector is plotted at point B on the chart. A constant 2.7:1 SWR curve is drawn between the two impedance points. The length of cable needed is read clockwise along the scale labeled, WAVELENGTHS TOWARD GENERATOR from the lines drawn through points A to B. From the chart, the length of the line needed is 0.374 λ.

The EZ-Lindenblad was designed for a center frequency of 145.9 MHz to optimize its performance in the satellite sub band. At 145.9 MHz, a wavelength is about 81 inches and since the coax used has a velocity factor of 0.78, we need to make the feed cables 81 × 0.374 × 0.78 = 23.6 inches long.

There are several computer programs available today that can also be used to do the Smith Chart calculations. These include *TLW*, provided with *The ARRL Antenna Book* and *MicroSmith* formerly offered by the ARRL, which was used as a cross check.[6]

Construction

This antenna was designed to be rugged and reliable yet easy to build using only hand

From August 2007 QST © ARRL

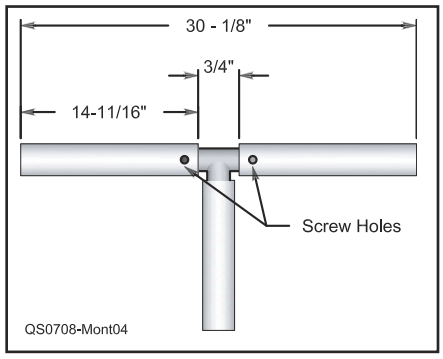

Figure 4 — Dipole dimensions.

Table 2
Aluminum Tubing Lengths

Description	*Quantity*	*Length*
Dipole rods	8	14 11/16"
Cross booms	2	23"

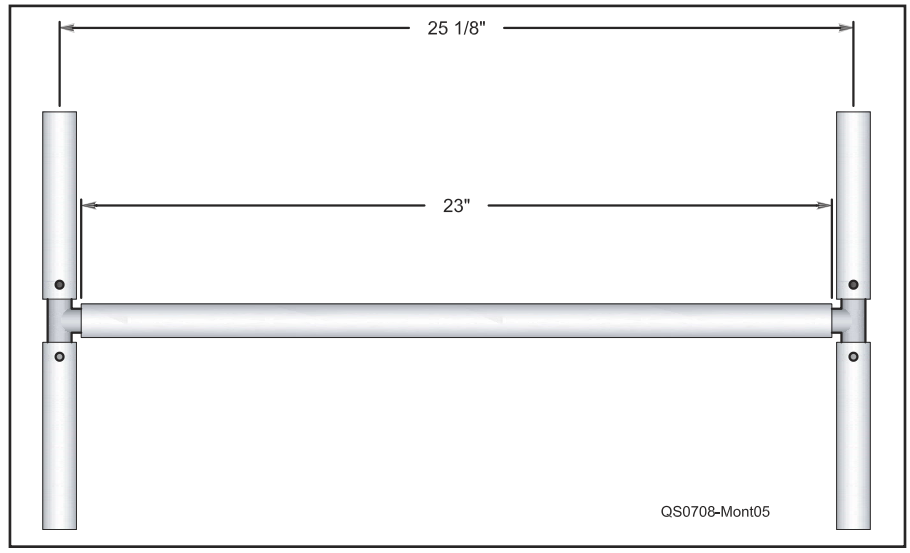

Figure 5 — Dimension of dipole spacing on cross-boom.

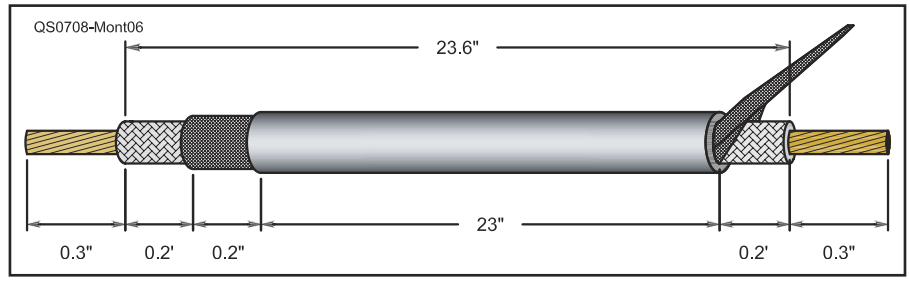

Figure 6 — Feed cables stripping dimensions.

tools with all of the parts readily available as well. Please see the parts list in Table 1. Although not critical, the construction will be easier if the specified 17 gauge aluminum tubing is used since the inner wall of the tubes will be just slightly smaller than the outer wall of the PVC insert Ts used to connect them. If heavier gauge tubing is used, it will be necessary to file down the PVC insert Ts to make them fit inside the aluminum tubes.

Start by making a mounting bracket to mount the N-connector and the cross booms. Cut a ⅝ inch hole in one side of the short piece of angle stock and rivet or screw it to the bottom of the long piece of angle stock. The completed bracket with the connector and cables attached can be seen in Figure 3.

Next, cut the aluminum tubing to make the cross booms and dipole rods as shown in Table 2. Drill holes for the machine screws at each end of the cross booms but do not insert the screws yet. Attach the cross booms to the long section of angle stock with rivets or screws. One cross boom will mount just above the other as can be seen in Figure 3. The cross booms should be perpendicular to the mounting bracket so that they will be horizontal when the antenna is mounted to its mast. Make sure that the centers of the cross booms are aligned with each other so that the ends of the cross booms are all 11½ inches from the center cross.

Make the dipoles by inserting a PVC insert T into two dipole rods. It should be possible to gently tap in the rods with a hammer but it may be necessary to file down the insert T a little if the fit is too tight. Applying a little PVC cement to the insert T will soften the plastic and make it easier to insert into the aluminum tubing if the fit is too tight. The overall dipole length dimension is critical so take care to get this correct as shown in Figure 4.

Drill holes for machine screws in each dipole rod but do not insert the screws yet. The screws will be used to make the electrical connections to the dipoles at the center. The screw holes should be about ⅜ inch from the end of the tubing.

The dipole assemblies are attached by gently tapping the PVC insert-T into the end of each cross-boom with a hammer. The dimensions are shown in Figure 5.

Next, temporarily attach the mounting bracket to a support so that each of the cross booms is perfectly horizontal. Measure this with a protractor. Now, using the protractor, rotate the dipole assemblies to a 30° angle with the right-hand side of the nearest dipole tilting up when you are looking toward the center of the antenna. Drill a small hole through the existing cross-boom holes into the PVC insert-Ts and then use the machine screws to fasten the dipole assemblies into place. For a nice finishing touch, the dipole ends can be fitted with ¾ inch black plastic end caps.

Next, make the four feed cables by cutting and stripping the RG-59 coax as shown in Figure 6. On the dipole connection side, unwrap the braid and form a wire lead. Apply the smaller ring terminal to the center conductor and use the larger ring terminal for the braid. At the other end of the cable, do not unwrap the braid but strip off the outer insulation. Slip a 1 inch piece of shrink wrap over the coax and apply to the dipole side. Next,

Figure 7 — The EZ-Lindenblad as a portable or Field Day antenna. A 70 cm antenna is on the top.

From August 2007 QST © ARRL

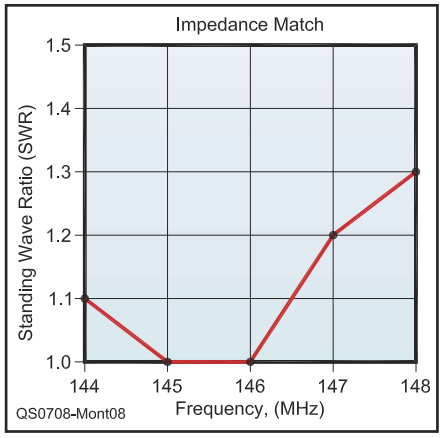

Figure 8 — Lindenblad antenna SWR at 50 Ω.

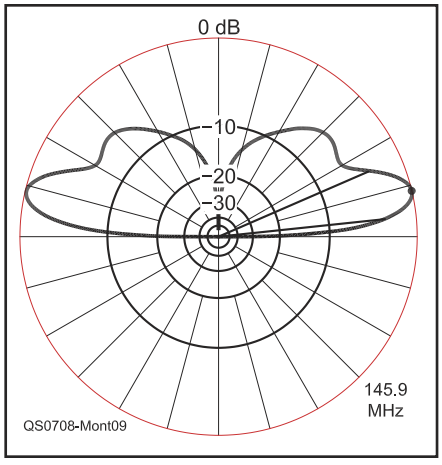

Figure 9 — *EZNEC* radiation pattern of Lindenblad antenna.

slip a cable ferrite over the cable and push all the way to the dipole end as far as it will go (ie, up to the heat-shrink tubing.) The fit will be snug and you may need to put a little grease on the cable jacket to get it started.

Prepare each dipole for its feed cable by first cleaning the area around the screw holes with steel wool and then applying Ox-Gard grease. This is to ensure a good electrical connection. The coax center conductor goes to the up side of the dipole and the braid goes to the down side. To make a connection, put a machine screw through the ring terminal and gently screw into the dipole tubing. Do not overtighten the screws or you will strip the tubing.

Apply Ox-Gard or other corrosion resistant electrical grease around the hole for the N connector. Take the 4 inch piece of braid and put the end of it through the hole for the N connector. This provides the ground connection. Secure the N connector in the mounting hole to clamp the braid. Use a wire tie or tape to hold the four feed cables together at the connector ends. Make sure to align the cables so that all the ground braids are together and the center conductors all extend out the same amount. Do not twist the center conductors together. Carefully push the four cable center conductors into the center terminal of the N connector and solder them in place. Wrap the exposed center conductors of the cables and the connector with electrical tape.

Take the piece of braid that is clamped to the N connector and wrap it around the four exposed ground braids of the coax cables. Solder them all together. This will take a fair amount of heat but be careful not to melt the insulation. After this cools, apply electrical tape over all the exposed braid and fix with wire ties. The cables should be secured to the cross booms with wire ties.

The mounting bracket provides a way to attach the antenna to a mast using whatever clamping mechanism is convenient. For a permanent mount, drill holes in the bracket to accept a pair of U bolts. The author's antenna was intended for portable operation and the bracket was drilled to accept two #8 stainless steel screws. These screws pass through a portable mast and the antenna is secured with stainless steel thumbscrews. This allows the antenna to be set up or taken down in less than a minute. The completed portable antenna as used for Field Day 2006 is shown in Figure 7. The little antenna at the top is for 70 cm.

Standing Wave Ratio

The antenna impedance match to 50 Ω was tested using an MFJ-259B SWR meter, which has a digital readout of standing wave ratio (SWR) and frequency. The frequency accuracy was verified using an external frequency counter and the 1.0:1 calibration was checked with a Narda precision 50 Ω load.

The antenna was connected to the SWR meter with a 6 foot coax jumper made of Belden 9913F7, which has very low loss. The SWR was measured at 1 MHz intervals over the 144-148 MHz range. As can be seen in the chart of Figure 8, the antenna provides an excellent match over the entire 2 meter band.

Power Handling Capability

This antenna was designed to safely handle any of the currently available VHF transceivers. The power handling capability was tested by applying a 200 W CW, signal, key down for 9½ minutes. Immediately after the test, the ferrites and cables were checked and there was no noticeable temperature rise.

Radiation Pattern

The antenna radiation pattern predicted by the *EZNEC* model is shown in Figure 9. This is the elevation plot with the antenna mounted at six feet above ground although it can be mounted higher if desired for better coverage to the horizon. As shown in the plot, the pattern favors the lower elevation angles. The –3 dB points are at 5° and 25° with the maximum gain of 4.8 dBic (with respect to an isotropic circularly polarized antenna) at around 13°. This is an excellent pattern for accessing LEO satellites. Most of the satellite pass elevations will be in this range and it is also the elevation at which the satellite provides the best chance for DX contacts.

The antenna radiation is right-hand circularly polarized, which will work with virtually any LEO satellite that uses the 2 meter band. The circularity was checked by measuring the difference between the horizontal and vertical radiation components. This was done using a linearly polarized sense antenna mounted 100 feet away feeding into an FT-817 radio with the AGC switched off. The radio audio was connected to an ac voltmeter with a dB scale. The test showed a difference of less than 3 dB, which is very good for an omnidirectional antenna. A reference horizontally polarized antenna measured nearly a 30 dB difference.

On the Air

The EZ-Lindenblad antenna has been used for SSB, FM and packet operation on the AO-07, FO-29, SO-50, AO-51, VO-52, NO-44, NO-60 and NO-61 satellites. The portable setup, as seen in Figure 5, was used for the satellite station at the North Shore Radio Association, NS1RA, 2006 Field Day effort. Field Day is an excellent test of any antenna as it is probably the busiest 48 hours of the year on the satellites and the EZ-Lindenblad performed well.

An earlier version of this antenna was published in the *AMSAT Space Symposium Proceedings* of October 2006.

Notes

[1]G. Brown and O. Woodward Jr. *Circularly Polarized Omnidirectional Antenna*, RCA Review, Vol 8, no. 2, Jun 1947, pp 259-269.

[2]See Note 1.

[3]EZ*NEC+ V4* antenna analysis software by Roy W. Lewallen, W7EL, available from **www.eznec.com**.

[4]F. Polkinghorn, "Phillip H. Smith, Electrical Engineer, an Oral History," IEEE History Center, Rutgers University, New Brunswick, NJ. Available at **www.ieee.org**.

[5]Smith Chart information is available at **www.arrl.org/tis/info/chart.html**.

[6]R. D. Straw, Editor, *The ARRL Antenna Book,* 21st Edition. Available from your ARRL dealer or the ARRL Bookstore, ARRL order no. 9876. Telephone 860-594-0355, or toll-free in the US 888-277-5289; **www.arrl.org/shop/**; **pubsales@arrl.org**.

Tony Monteiro, AA2TX, was first licensed in 1973 as WN2RBM. He has worked in the electronics industry for over 25 years starting as a member of the technical staff at Bell Laboratories and later as an engineering director at several telecommunications companies. You can reach Tony at 25 Carriage Chase Rd, North Andover, MA 01845 or at **aa2tx@amsat.org**.

From August 2007 QST © ARRL